academicJournals

Vol. 8(15), pp. 647-651, 23 April, 2013
DOI: 10.5897/IJPS2012.3800
ISSN 1992-1950 © 2013 Academic Journals
http://www.academicjournals.org/IJPS

International Journal of Physical Sciences

Full Length Research Paper

Meditator's non-contact effect on cucumbers

Osamu Takagi[1]*, Masamichi Sakamoto[2], Hideyuki Kokubo[1], Hideo Yoichi[1], Kimiko Kawano[1] and Mikio Yamamoto[1]

[1]Information and Research Center, International Research Institute (IRI), 1108-2 Sonno, Inage, Chiba 263-0051, Japan.
[2]Aquavision Academy, 1228-3 Tsubuura, Narita, Chiba 287-0236, Japan.

Accepted 12 April, 2013

We clearly show the existence of an example of non-contact effect in which the "presence" of a meditator affects bio-samples without physical contact. This is the first report in the world to show this type of effect by scientific measurements. We used edible cucumber slices as bio-sensors and measured the concentrations of gas emitted from the slices by a technique developed by our group. The concentrations of gas emitted from cucumber slices were measured for a total of 672 sample petri dishes; each dish contained four cucumber slices so that a statistically meaningful comparison could be made. We found a statistically significant difference ($p=3.13\times10^{-10}$, t-test, two-tails) in the concentrations of emitted gas between the "presence" and the "absence" of the meditator. Our experimental results clearly indicated that there was a scientifically measurable effect on biological objects with which the meditator had no direct physical contact.

Key words: Non-contact effect, meditator, bio-sensor, cucumber, gas.

INTRODUCTION

It is a scientifically interesting theme whether or not humans can affect plant samples without coming into physical contact with them. However, no research has been conducted which scientifically measures this effect except some studies such as Grad (1976). Yamamoto et al. (2000, 2002) have conducted scientific research projects including the above theme at the National Institute of Radiological Sciences (Japan) since 1995. They have done measurements of bio-photons (Cohen and Popp, 1997; Inaba, 1997) (very low intensity visual range light emitted from bio-samples) for fundamental experiments to utilize them as bio-sensors since 1988 (Parkhomtchouk et al., 2000). Kokubo et al. (2010) have developed a bio-photon method, fluorescence method and gas method which utilize edible cucumber slices as bio-sensors. The gas method, which measures gas emitted from cucumber slices with gas detection tubes, enables measurement of a number of samples simultaneously at low cost. Therefore, we have used that method here.

The purpose of this paper is to verify by scientific measurements a case of the non-contact effect in which the presence of a meditator affects bio-samples without physical contact. A strict scientific comparison of the effect on bio-samples was conducted excluding all other factors between when a meditator is present ("presence") or absent ("absence"), where "absence" means the mediator was more than 5 km away from the place where the experiments were conducted. We experimentally investigated the effect on sliced cucumber samples by the gas method. The samples were slices of the fruit of *Cucumis sativus* 'white spine type'. A statistically very significant difference was obtained between the "presence" and "absence" with a sufficient number of

*Corresponding author. E-mail: takagi@a-iri.org. Tel: +81-43-255-5481. Fax: +81-43-255-5482.

experimental runs and the analysis of 672 measured data.

EXPERIMENTAL

Figures 1 and 2 show how cucumber samples were prepared. One set of samples uses four cucumbers A to D (Figure 1). Four pairs of sterilized plastic dishes (20 mm high and 90 mm diameter) were prepared (representing a standard set) (Figure 2). After the slices were placed in the dish, it was covered by a lid. We used 12 standard sets for one experimental run, representing 48 cucumbers per run; after use, dishes were discarded. As shown in Figure 3, EXP2 dish was stacked above EXP1 dish and both were placed above the meditator, while the remaining six dishes (EXP3 and EXP4 and CONT1 to CONT4) were placed at the Calibration Control Point, 8 m away from the meditator, where each pair was stacked one above the other. These dishes were placed 1.8 m above the floor in either location. Only one meditator (male, with 20 years of meditation experience using Hem-Sync® (Atwater, 1997)) participated in the experimental runs reported here, and the environment which he prefers for meditation was set up. In particular, a pyramid shaped structure was prepared. Written consent of the meditator to be involved in the meditation experiments was obtained, as well as approval from the ethics committee of the International Research Institute (IRI).

After a set of eight dishes (four pairs of dishes) were placed in their positions (Figure 3), the meditator meditated for 30 min. Immediately after the meditation, all the eight dishes were removed from their positions, their lids were taken off, and each dish was placed within a 2.2 L closed polypropylene container. After that, they were kept for approximately 36 h in a temperature-controlled room (at about 24°C) with no direct sunlight. Eight containers were stacked in two piles in such a way that the containers which have paired dishes were placed side by side. All containers were kept in the place 3.5 m away from pyramid before the gas measurement. Throughout this 36 h period, the cucumbers continued to emit gas. It is known that the concentrations reach the maximum level after about 12 h and remain constant afterward. Measurement of the gas contained in the closed container was done as follows. A gas sampling pump (GV-100: Gastech, Japan) to extract gas and gas detection tubes (ethyl acetate short-term gas-measuring detector tube 141L: Gastech, Japan) were used to measure the concentrations of gas generated from the cucumbers. The gas detection tubes can measure concentrations from 20 to 800 ppm. After 300 ml gas was extracted from the closed container using the gas sampling pump, the gas detection tube gauge was visually read. The accuracy of reading was on the order of 10 ppm.

One experimental run had four segments which were conducted continuously from early in the morning till sunset on one day to make the experiments as reliable as possible. The meditator was at least 5 km away from the pyramid during the first and the fourth segments. The first segment (before meditation, pre-med) was composed of three sets of experiments, in each of which eight dishes were placed in their positions for 30 min without the meditator inside the pyramid. The second segment (Meditation I, med-I) was composed of three experiments, in each of which the meditator meditated inside the pyramid for 30 min and all the other conditions were the same as in the first segment. There was about a 10 min break between the experiments. The third segment (Meditation II, med-II) was basically the same as the second. Between the second and the third, there was an hour lunch break. The fourth segment (after meditation, post-med) was basically the same as the first. We conducted seven experimental runs from April to October, the results of which were statistically analyzed and reported here.

The meditation was performed as follows. The meditator sat on a chair which was placed directly below the pyramid apex. During the 30 min meditation, he listened to Hemi-Sync®, which is an audio technology which helps a person to meditate for an extended period of time. The meditator wore a set of stereo headphones so that there was no sound leak to the environment. During the meditation, he imagined that he was breathing in energy from the earth as he breathed in and he was breathing in energy from heaven as he breathed out. He sometimes vocalized vowel sounds during meditation. He did not focus his attention onto the EXP1 and EXP2 samples which were placed right above him. Also, all the room lights were off and the blinds were closed so that the room was dimly lit even during the daytime.

The gas measurement results for the seven experimental runs were conducted on seven different days. The average values are in the range of 300 to 400 ppm for all four segments, before meditation, after meditation and Meditations I and II and the standard error is 21.1 to 25.5 ppm. Since the reading error is on the order of 10 ppm, the obtained data are very reliable.

MODE OF ANALYSIS

In order to see whether or not there is any influence from the meditator's presence on the cucumbers without having any direct physical contact, we introduce a new number which can be used to evaluate this. Such an effect can be buried within the noise of the data. The reason is that cucumbers as bio-sensors are very sensitive to many factors such as individual cucumber differences and environmental conditions including how samples are treated (temperature, humidity, electromagnetism, intensity of illumination, vibration and biorhythm). In order to minimize such variables we adopted a paired sample method (Figure 2) where EXP and CONT are paired and compared. A new number J is introduced to compare such a pair (Kokubo et al., 2010):

$$J = \ln (C_{EXP}/C_{CONT})$$

where C_{EXP} is the concentration of gas for EXP sample, while C_{CONT} is that for CONT sample. The J value eliminates the environmental changes and the effects of systematic deviations which may exist in the experimental environment, enabling us to highlight the difference between when the meditator is present ("presence") or absent ("absence"). When such factors as the individual differences and the experimental conditions for the EXP sample and the CONT sample are the same, C_{EXP} and C_{CONT} become the same, resulting in J=0.

We can calculate four J values for each set of experiments by using the gas measurement data. For each set of experiments, two pairs of samples EXP1 and CONT1 and EXP2 and CONT2 are called the main experiment samples and the each pair has a J value, which is termed J_E. At the same time, two pairs of samples EXP3 and CONT3 and EXP4 and CONT4 are called calibration experiment samples and the each pair has a J value with the average of these two J values being termed J_{CAL}.

Now in order to compare J_Es from different sets, we introduce a zero-point calibration method in which a new value $J_{E/CAL} = J_E - J_{CAL}$ is introduced. The reason behind using this calibration method is that the two pairs of samples EXP3 and CONT3 and EXP4 and CONT4 are placed in nearly equal conditions, which can be treated as the baseline in each set of experiments (Kokubo et al., 2010). In each segment, three sets of experiments are conducted with a total of six $J_{E/CAL}$s and three J_{CAL}s. Now we average the six $J_{E/CAL}$s to obtain $J_{E/CAL/AVE}$. This way, in each of the four segments (pre-med, med-I, med-II and post-med), $J_{E/CAL/AVE}$ is calculated. Furthermore, in order to compare when the meditator is absent and present, we average the $J_{E/CAL/AVE}$ for pre-med and that for post-med and

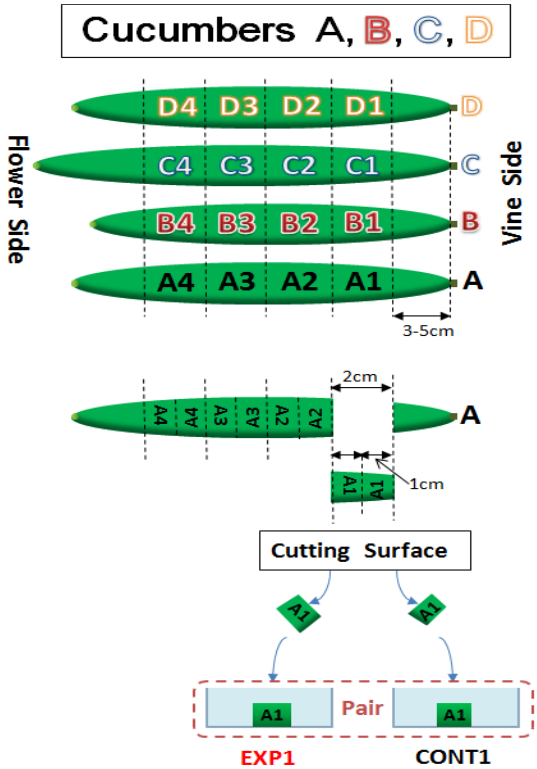

Figure 1. Preparation of cucumber slice samples.

subtract this value from each $J_{E/CAL}$ to obtain a new value J_C defined by the following equation:

$J_C = J_{E/CAL} - \{J_{E/CAL/AVE}$ (pre-med) + $J_{E/CAL/AVE}$ (post-med)$\}/2$.

Each experimental run is composed of four segments and each segment has six J_Cs.

RESULTS AND DISCUSSION

Figure 4 (main) clearly indicates that the average values of J_C when meditator is absent ("absence" J_C=0.0) differ significantly from those for the case in which the meditator is present ("presence" J_C=-0.179). The J_C values are plotted with an error bar which corresponds to the 95% confidence interval for n=84. By analyzing the J_C values for these two cases, a p value of 3.13×10^{-10} (t-test, two tails) is obtained between them indicating a statistically significant difference. Figure 4 (inset) indicates that the average values of J_C when the meditator is absent (pre-med J_C=0.028 and post-med J_C=-0.028) differ from those when the meditator is present (med-I J_C=-0.173 and med-II J_C=-0.184). The horizontal axis corresponds to the flow of time during the day when the experiments took place. The J_C values are plotted with an error bar which corresponds to the 95% confidence interval for n=42. There is a lunch break between med-I and med-II. The data for med- I and med-II are nearly equal, while the data for pre-med and post-med are also nearly equal.

In order to explain the observed results, here we would like to review various known effects as causes. First, the effect of the electrostatic field created by the meditator can be excluded as a cause of the observed results, since the cucumber samples were in a Faraday cage as shown in Figure 3. Second, to consider the effect of temperature change by the presence of the human meditator, the temperature of the sample circumference was monitored during the experiments. No temperature rise due to the meditator's presence was detected, which indicates that the temperature effect of the meditator can also be excluded as a cause. It is thought that the effects of all other known factors are negligible. Therefore, the observed results may well be caused by a phenomenon which is not yet known scientifically but may well be caused by the presence of the meditator. Revealing the cause of this phenomenon would advance modern science greatly. The next theme should be conducting experiments with a different meditator.

Conclusion

We have investigated whether or not the presence of a meditator has a scientifically measurable influence on biological objects to which he has no direct physical contact. In this reports, cucumber slices were used as bio-sensors to detect such an influence. We developed experimental and analytical methods by which the "presence" and the "absence" of a meditator can be strictly compared excluding all other factors. The concentrations of gas emitted from cucumber slices were measured for a total of 672 samples. These experiments were conducted on seven different days to minimize any possible erroneous influence that could occur within a day. By statistically analyzing these data, we have demonstrated that there is a statistically significant difference ($p=3.13\times10^{-10}$, t-test, two tails) between the "presence" and the "absence" of a meditator in the concentrations of emitted gas. We have verified that this is a case of a non-contact effect in which the presence of a meditator affects bio-samples without physical contact. The observed results may well be due to a phenomenon which is not yet known scientifically but may well be caused by the presence of the meditator. Revealing the cause of this phenomenon would advance modern science greatly.

ACKNOWLEDGEMENT

This study was supported by the Masamichi Sakamoto Hypertech Project which is funded by the Aquavision Academy.

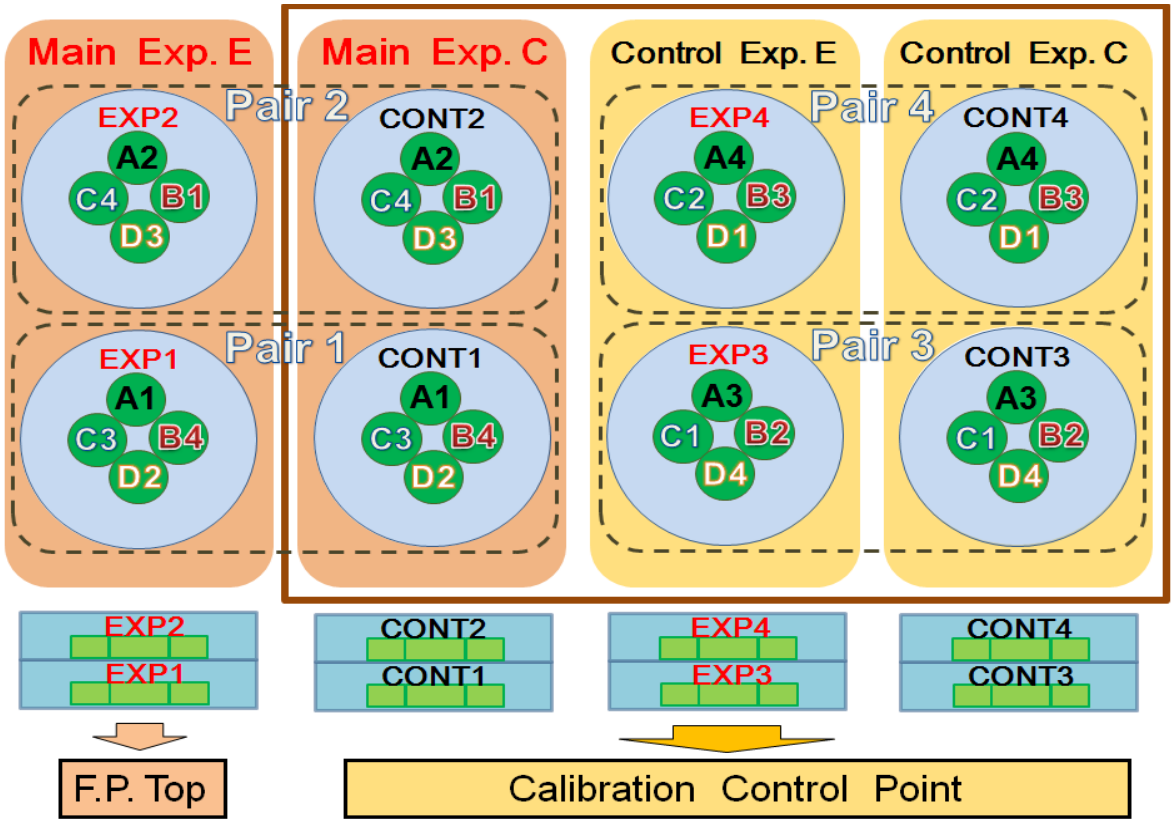

Figure 2. Preparation of cucumber slice samples on petri dishes.

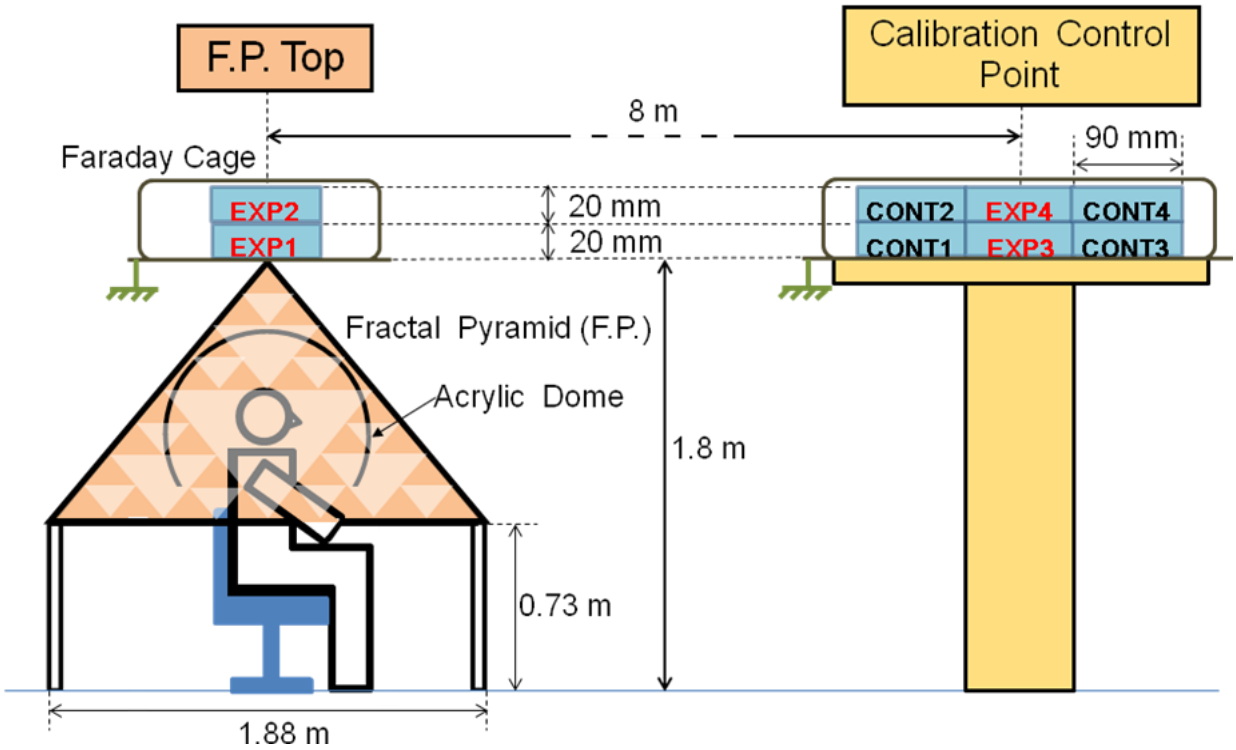

Figure 3. Position of cucumber slice samples relative to meditator position.

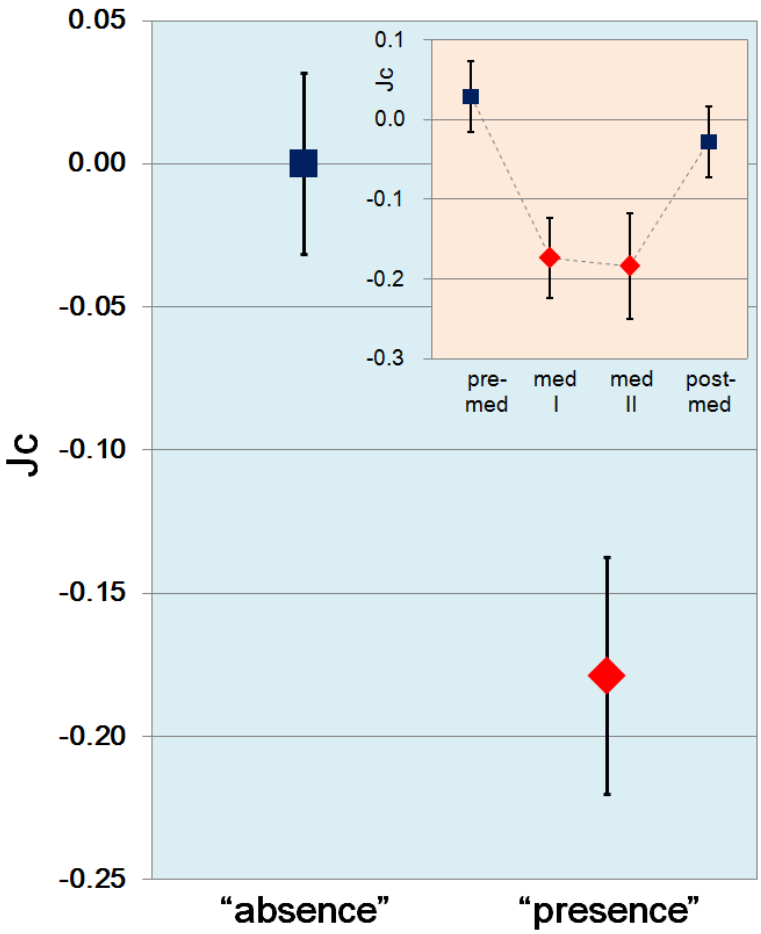

Figure 4. Average value of J_C.

REFERENCES

Atwater FH (1997). Accessing anomalous states of consciousness with a binaural beat technology. J. Sci. Explor. 11(3):263.

Cohen S, Popp FA (1997). Biophoton emission of the human body. J. Photochem. Photobiol. B: Biol. 40:187.

Grad B (1976).The biological effects of the "laying on of hands" on animals and plants: Implications for biology. in Parapsychology, G. R. Schmeidler, Eds. (Metuchen, NJ, Scarecrow Press) P. 76.

Inaba H (1997). Photonic sensing technology is opening new frontiers in biophotonics. Opt. Rev. 4(1A):1.

Kokubo H, Takagi O, Koyama S (2010). Application of a gas measurement method –Measurement of ki fields and non-contact healing . J. Intl. Soc. Life Info. Sci. 28(1):95.

Parkhomtchouk D, Hirasawa M, Yamamoto M (2000). Low noise system with optical cable probe for ultra-weak photon emission measurements from living matter. J. Intl. Soc. Life Info. Sci. 18(1):109.

Yamamoto M, Hirasawa M, Kokubo H, Tanaka M, Kawano K, Dmitri V, Zhang T, Fukuda N, Hirata T, Murakami S, Moroe T, Makino K, Tsuchiya K, Kokado T, Taniguchi J, Nakamura A, Kurano M, Furukawa A, Furukawa M, Matsumoto T, Sakaida H, Machi Y (2000). Study on analyzing methods of human body functions using various simultaneous measurements. J. Intl. Soc. Life Info. Sci. 18(1):61.

Yamamoto M, Kokubo H, Haraguchi S, Kokado T, Tanaka M, Zhang T, Chen W, Kotake J, Yoichi H, Kawano K, Fukuda N (2002). Are there any effects other than suggestion in external Qi. J. Intl. Soc. Life Info. Sci. 20(2):317.